WENZHOU KHAN ELECTRONIC

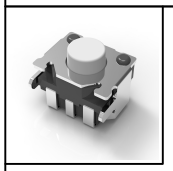

Switch drawings

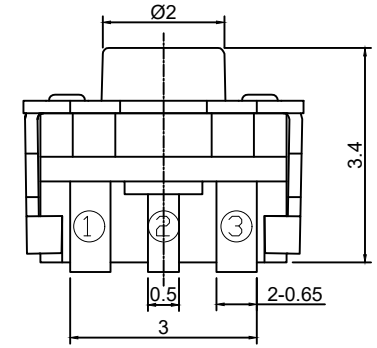

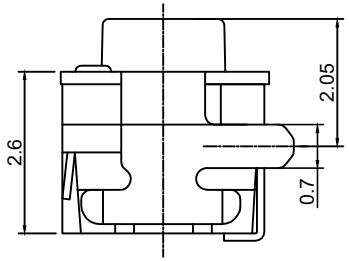

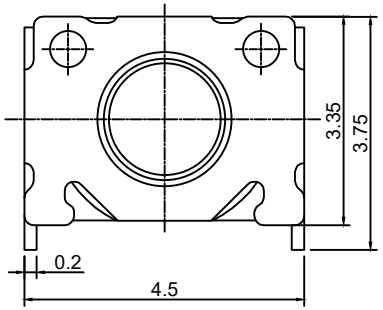

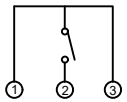

CIRCUIT DIAGRAM

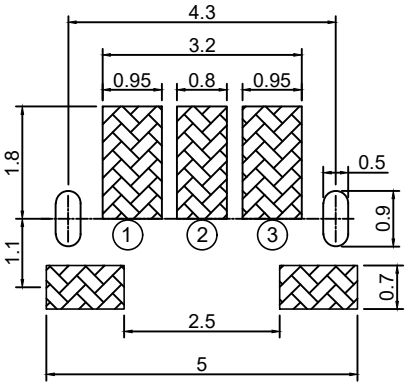

P.C.B. LAYOUT

Note: Unmarked tolerances for linear dimensions shall be in accordance with GB/T1804 level m.

Number Description

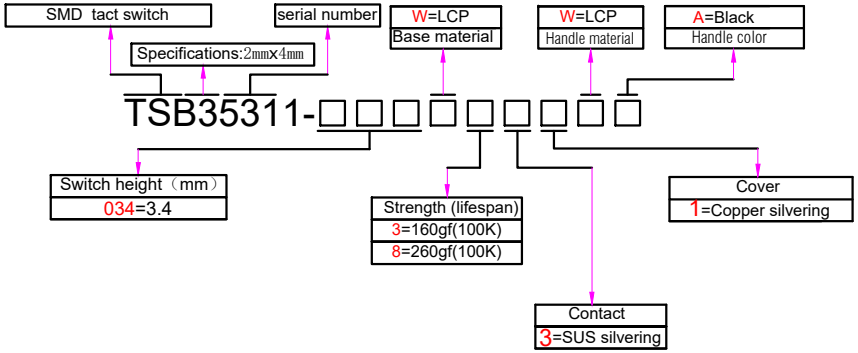

SPECIFICATIONS	
Funtion:	Momentary action
Contact Arrangement:	SPST, Normally Open
Termination:	THD version
Environmental	
Operating Temperature:	-25～+70℃
Relative Humidity:	（40℃）≤95%
Electrical	
Contact Rating:	50mA 12V DC
Dielectric Strength:	250VAC /1min
Contact Resistance:	100mΩMax.
Insulation Resistance:	100MΩMin.
Travel:	0.2±0.1mm
Sealing:	/
Mechanical	
Actuation Force:	Optional
Life Expectancy:	100K

Materials	
5.Stem:	Black LCP
4.Cover:	Phosphor copper plated with silver
3.Spring:	Stainless steel covered with silver
2.Holder:	Black LCP
1.Terminal:	Phosphor copper plated with silver

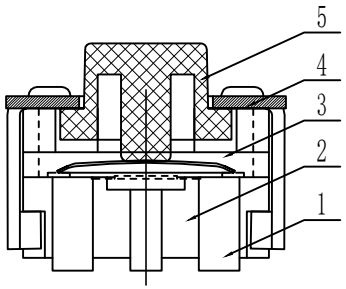

WENZHOU KHAN ELECTRONIC CO.，LTD. Add:No.92 Huifeng Road, Songhu Industrial, Yueqing 325600. Zhejiang , China Tel:+86-577-62560700 Fax:+86-577-62530255 E-mail: info@khan.cn ; sales@khan.cn